böhler welding by voestalpine

Lasting Connections

NEW WELDING HELMETS FROM BÖHLER WELDING GET THE PERFECT ALL-ROUND PROTECTION

Guardian^{50}

Designed for a wide range of Welding and Grinding Applications

- High Impact Nylon Shell
- Comfort-Headgear with longitudinal and angular adjustments, smooth ratcjet
- The ADF: Shade 4, 9-13, 50 x 100 viewing area
- True colour
- 4 arc sensors
- CE classification 1/1/1/2
- Grind mode via external switch
- 2 years warranty

Guardian^{62}

The experts choice (Best-In-Class ADF Clarity, Light Weight and True Colour)

- High Impact Nylon Shell
- Comfort-Headgear with longitudinal and angular adjustments, smooth ratcjet
- The ADF: Shade 4, 5-9/9-13, 62 x 98 viewing area, Best-In-Class-Clarity
- True colour
- 4 arc sensors
- CE classification 1/1/1/2
- Grind mode via external switch
- Light weight at 490 gram
- 2 years warranty

Guardian^{62F}

The All-in-One Solution Protection and Clear View

- High Impact Nylon Shell
- Flip-up
- Comfort-Headgear with longitudinal and angular adjustments, smooth ratchet
- The ADF: Shade 4, 5-9/9-13, 62 x 98 viewing area, Best-In-Class-Clarity
- True colour
- 4 arc sensors
- CE classification 1/1/1/2
- Grind mode via external switch
- 2 years warranty

voestalpine Böhler Welding
www.voestalpine.com/welding

voestalpine
ONE STEP AHEAD.

009/EN/GL/2018

PART LIST AND ASSEMBLY BÖHLER WELDING HELMET

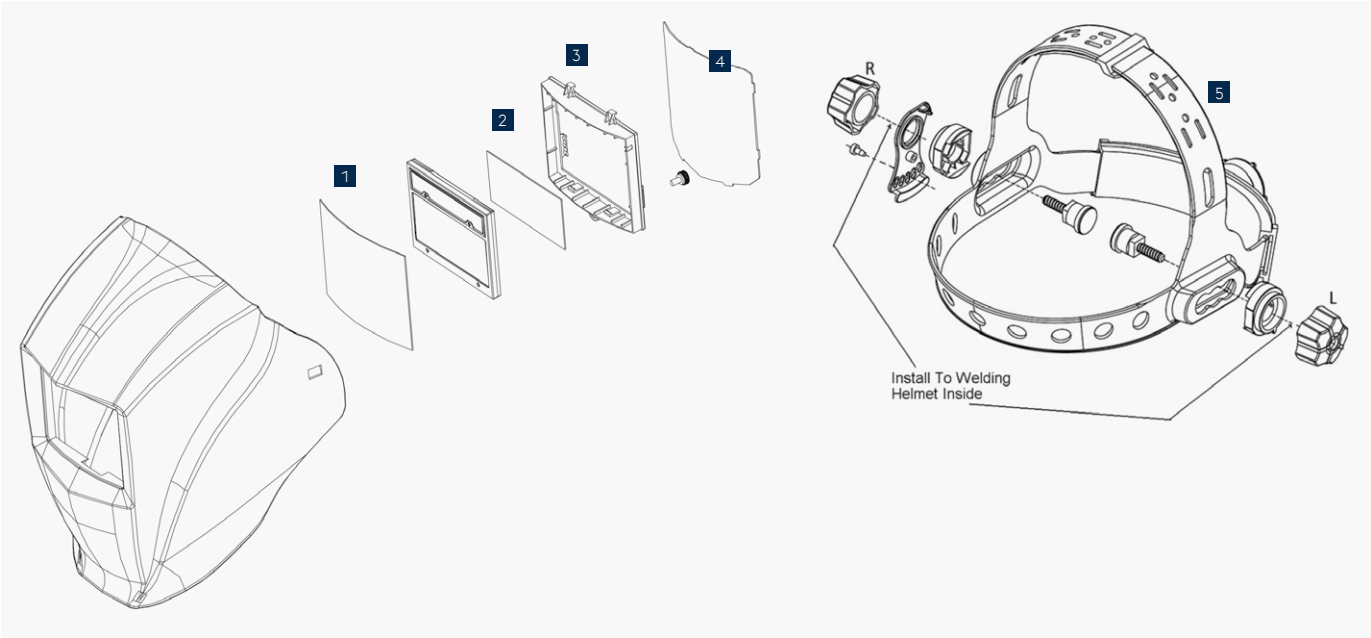

Part list

Item	Description	Part No.
1	front cover lens	32423
2	inner lens Guardian^{50}	32425
2	inner lens Guardian^{62}, ^{62F}	32433
3	ADF retainer and screw Guardian^{62}, ^{62F}	32442
3	ADF retainer and screw Guardian^{50}	32443
4	grinding visor Guardian^{62F}	32437
5	headgear Böhler Guardian^{50}, ^{62}	32406
5	headgear Böhler Guardian^{62F}	38726
*	sweatband (2pcs. front and rear)	32416
*	diopter 1.0	32444
*	diopter 1.5	32445
*	diopter 2.0	32452
*	diopter 2.5	32456
*	Battery ADF CR2450	32517

* not in illustration

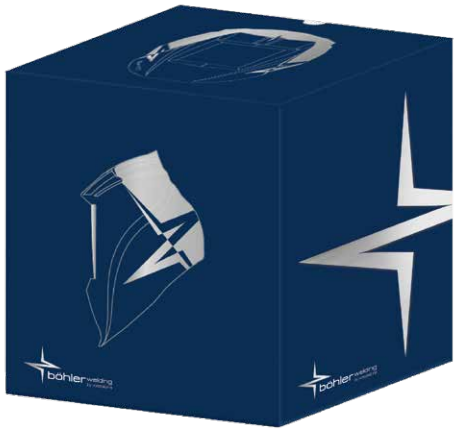

Packaging & Shipment

Packaging units	Product name	Part No.
6 helmets in 1 carton unmixed	Böhler Guardian^{50}	32371
	Böhler Guardian^{62}	32373
	Böhler Guardian^{62F}	32374

Minimum order quantity: 8 cartons on 1 EURO-Pallet (48 helmets)

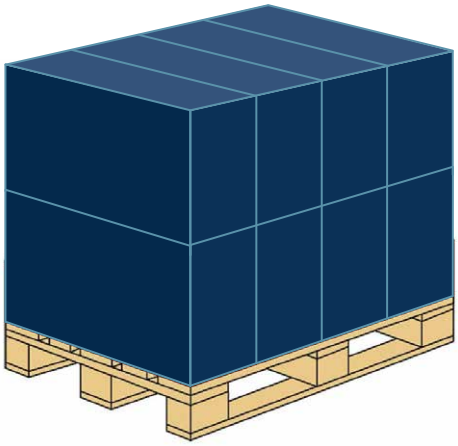

voestalpine Böhler Welding
www.voestalpine.com/welding

voestalpine
ONE STEP AHEAD.